© Fabrika Rauna 2017

1st floor
S 1:75

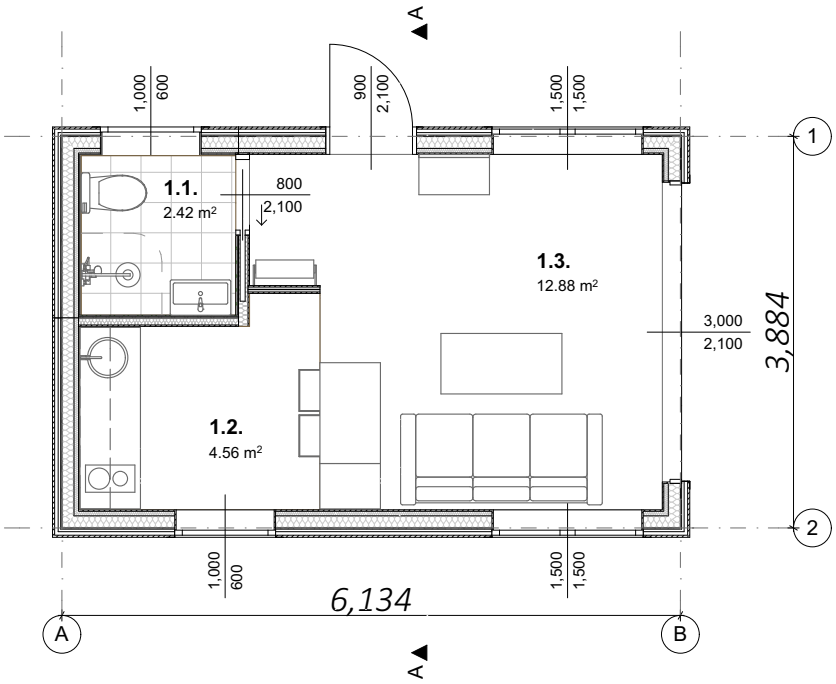

Section A - A
S 1:75

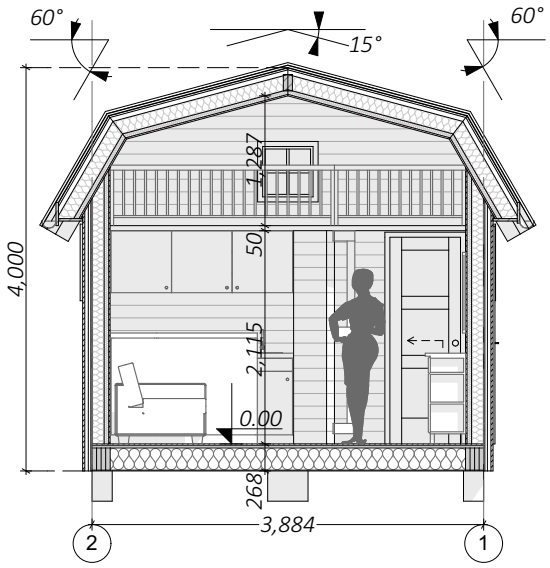

Loft
S 1:75

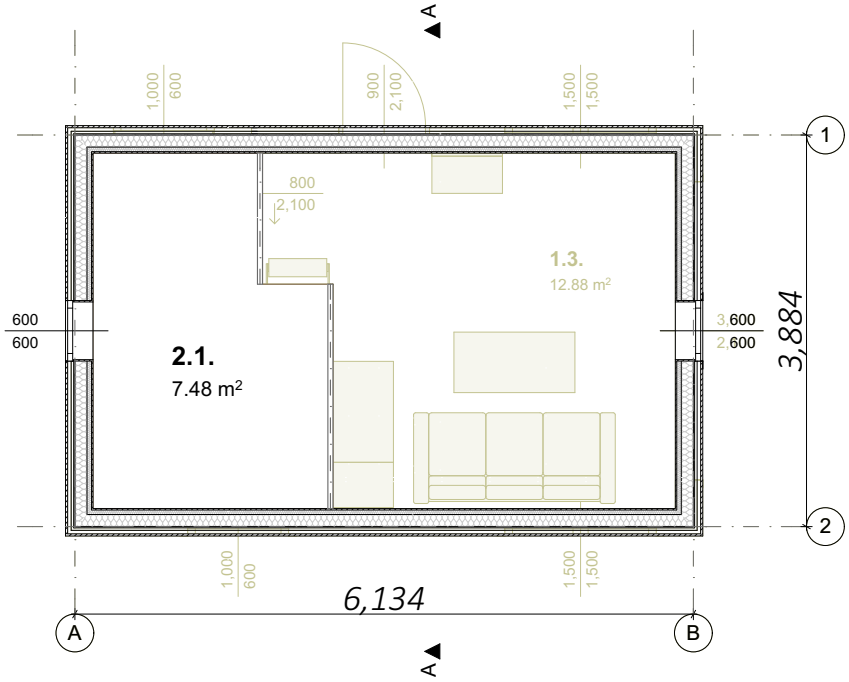

Total area: 25.00 m²

Living area:
1st Floor: 19.86 m²
Loft: 7.48 m²

DWH | Fabrika Rauna

Model:	066		
Drawing:	Floorplans, Section A - A		
Customer:			
Scale: 1:75/ A4	**Design:** I. Peneze **Date:**	**Page** 1	**Pages**

© Fabrika Rauna 2017

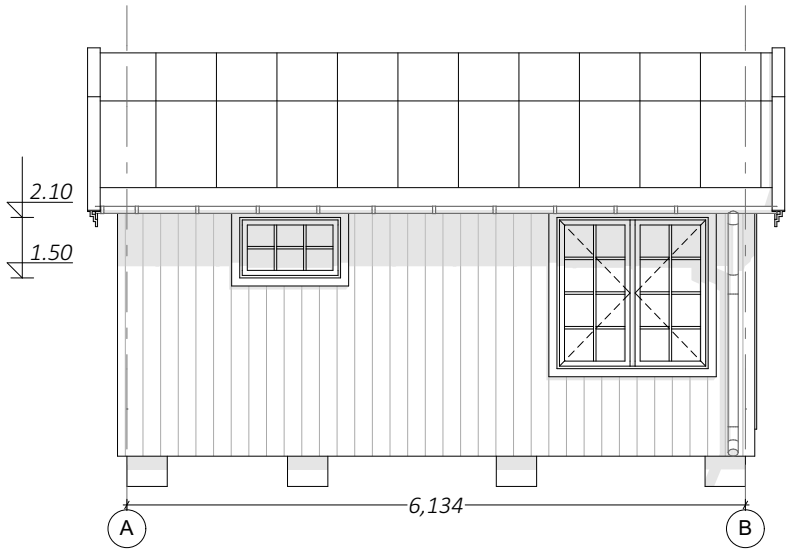

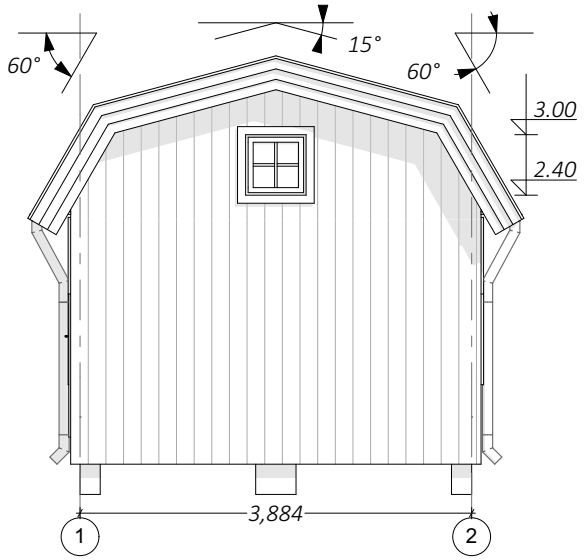

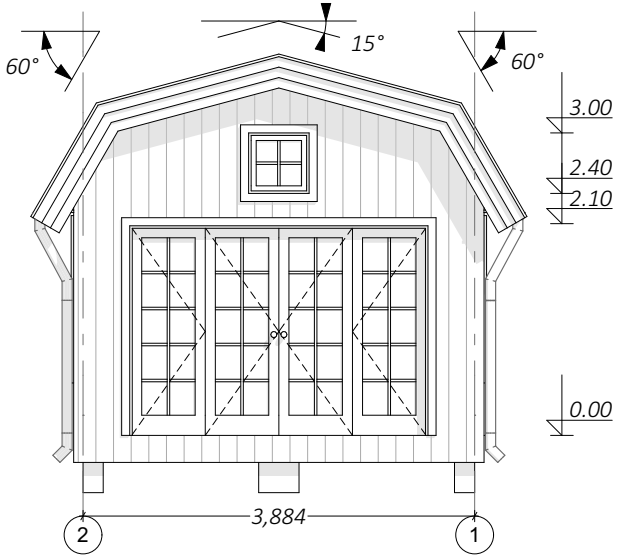

DWH | Fabrika Rauna

Model:	066
Drawing:	Fasades
Customer:	
Scale: 1:75/ A4	**Design:** I. Peneze **Date:**
Page	2
Pages	

© Fabrika Rauna 2017